UNIVERSITI TUN HUSSEIN ONN MALAYSIA

FINAL EXAMINATION
SEMESTER II
SESSION 2015/2016

COURSE NAME	:	ELECTRICAL TECHNOLOGY
COURSE CODE	:	BNB 30403
PROGRAMME CODE	:	BNB
EXAMINATION DATE	:	JUNE / JULY 2016
DURATION	:	3 HOURS
INSTRUCTION	:	ANSWERS **ALL** QUESTIONS

THIS QUESTION PAPER CONSISTS OF **SIX (6)** PAGES

Q1 (a) Give an example of active and passive elements.

(2 marks)

(b) A 30 V source is applied to a resistor with 4-colour bands red, black, brown, and silver. Calculate the minimum and maximum currents based on the tolerance of the resistor.

(3 marks)

(c) Consider the circuit shown in **Figure Q1(c)**. Determine v_1, v_2 and v_3 by using nodal analysis.

(4 marks)

(d) Let current $I = 2t$ A flow into a capacitor for 5 seconds. Determine:

(i) The total charge, Q, in Coulomb.

(3 marks)

(ii) The capacitance if voltage across the capacitor is 5 V.

(1 marks)

(e) Draw a schematic diagram of the single phase distribution unit.

(3 marks)

(f) A ring circuit is the main power circuit found in some homes to feed sockets and lighting points. Draw a schematic diagram for 5 units 13 A switched socket outlets in ring connection.

(4 marks)

Q2 (a) Describe the differences between Kirchhoff Voltage Law and Kirchhoff Current Law with the aid of diagram/figures.

(4 marks)

(b) A circuit consists of three resistances 12 Ω, 18 Ω and 36 Ω respectively, joined in parallel, is connected in series with a fourth resistance of unknown value. The whole circuit is supplied at 60 V and it is found that the voltage of the 12 Ω resistance is 30 V.

(i) Draw the circuit diagram of the configuration and label its parameter accordingly.

(2 marks)

(ii) Determine the value of the fourth resistance.

(2 marks)

(iii) Calculate the total power dissipated in the circuit.

(2 marks)

(c) Five lamps having resistance 185 Ω, 205 Ω, 215 Ω, 195 Ω and 200 Ω respectively are operated **in series** from the main supply. A voltmeter is connected to the 200 Ω lamp and reads 85 V.

(i) Calculate the supply voltage of the circuit.

(2 marks)

(ii) Obtain the total power consumed by the lamps.

(2 marks)

(d) Explain the difference between step-up and step-down transformer.

(2 marks)

(e) An ideal transformer with the primary terminal connected to a 240 V mains, supplies a 12 V, 150 W lamp. Calculate:

(i) The transformer turns ratio.

(1 marks)

(ii) The current taken from the supply.

(3 marks)

Q3 (a) Name and briefly explain the most popular methods of electrical circuit protection.

(4 marks)

(b) In a modern home, each wiring circuit is protected by a circuit breaker rather than a wire fuse. Give **TWO (2)** advantages of a circuit breaker compared with a wire fuse.

(3 marks)

(c) The current in an AC circuit at any time, t seconds is given by the equation,

$$I = 120 \sin (100 \pi t + 0.36)\ A$$

Find:

(i) The peak value and the frequency.

(2 marks)

(ii) The value of the current when $t = 0\ s$.

(2 marks)

(iii) The value of the current when $t = 8\ ms$.

(2 marks)

(iv) The time when the current first reaches 60 A.

(2 marks)

(d) Solve the following complex number and leaves the result in polar form.

(i) $\dfrac{15\angle 45^\circ}{3-j4}+j2$

(2 marks)

(ii) $\dfrac{8\angle -20^\circ}{(2+j)(3-j4)}+\dfrac{10}{5+j12}$

(3 marks)

Q4 (a) State **FOUR (4)** possible connections for three phase system.

(4 marks)

(b) Explain briefly **TWO (2)** losses that occur in a transformer.

(4 marks)

(c) A certain type of transformer has a primary resistance of 940 Ω and a primary current of 5 A. The secondary current is 90 A and the secondary voltage is 240 V. Determine the efficiency of the transformer.

(4 marks)

(d) Calculate the I_1, I_2 and I_3 in the network shown in **Figure Q4(d)** using mesh analysis.

(4 marks)

(e) Describe the differences between Thevenin's Theorem and Norton's Theorem with the aid of diagram/figures.

(4 marks)

Q5 (a) Insulation layer is a critical part of a power cable. List **FOUR (4)** insulation types used to protect the cable core.

(4 marks)

(b) A 4 mm² p.v.c. sheathed circuit feeds a 6 kW water heater. The volt drop figure for 4 mm² two-core cable is 11 mV/A/m and has a length of 16 m. Permissible voltage drop is 4% and voltage supply is 240 V. Find the voltage drop and determines whether the cable meets the requirement.

(6 marks)

(c) Redraw the circuit in **Figure Q5(c)** into a circuit with an equivalent impedance Z_{total}. Then, evaluate and present I_{total} in polar form.

(10 marks)

-END OF QUESTIONS –

FINAL EXAMINATION

SEMESTER / SESSION : SEM II / 2015/2016
COURSE NAME : ELECTRICAL TECHNOLOGY
PROGRAMME CODE : BNB
COURSE CODE : BNB 30403

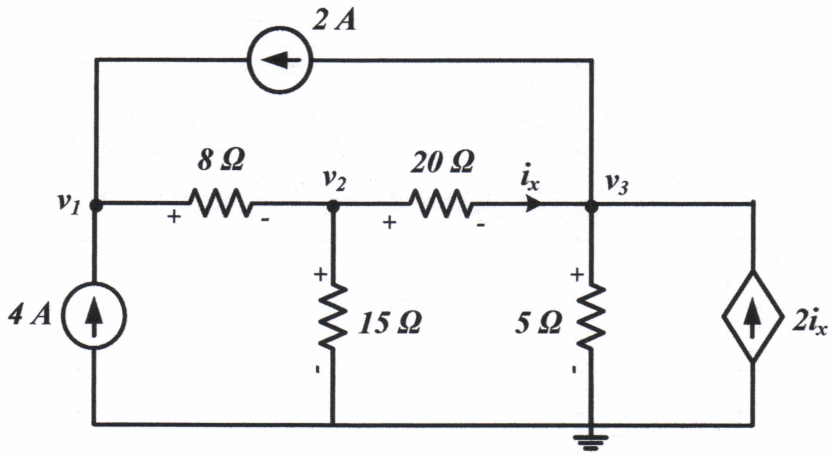

Figure Q1(c)

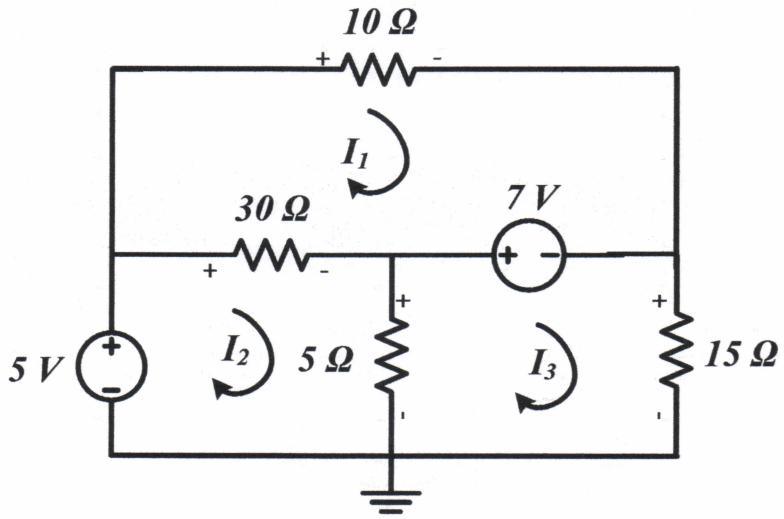

Figure Q4(d)

FINAL EXAMINATION

SEMESTER / SESSION : SEM II / 2015/2016
COURSE NAME : ELECTRICAL TECHNOLOGY
PROGRAMME CODE : BNB
COURSE CODE : BNB 30403

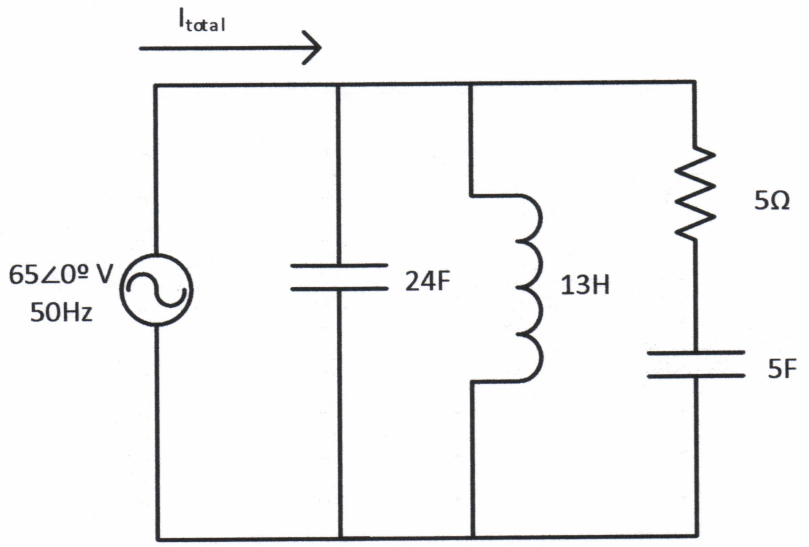

Figure Q5(c)