Universiti Tun Hussein Onn Malaysia

UNIVERSITI TUN HUSSEIN ONN MALAYSIA

FINAL EXAMINATION
SEMESTER II
SESSION 2017/2018

COURSE NAME	:	QUALITY CONTROL
COURSE CODE	:	BPB 24303
PROGRAMME CODE	:	BPB
EXAMINATION DATE	:	JUNE / JULY 2018
DURATION	:	2 HOURS AND 30 MINUTES
INSTRUCTION	:	ANSWER **ALL** QUESTIONS

THIS QUESTION PAPER CONSISTS OF **SIX (6)** PAGES

Q1 (a) Describe Plan, Do, Check and Action (PDCA) using general process map.

(10 marks)

(b) GTB company has problem in their production line as shown in **Table Q1**. Brainstorming has been made amongst employees to identify the actual causes as presented in **Table Q1.**

(i) Draw Pareto chart based on data from **Table Q1**.

(6 marks)

(ii) Explain the applicability of 80/20 rule for this problem based on result in question **Q1(b)(i)**.

(3 marks)

Table Q1: Causes of rejected unit

No	Causes	Quantity
1	Workmiss amongst employees	46
2	Inventory management problem	34
3	Lack of budget	5
4	Lack of time	3
5	Machine performance problem	3
6	Lack of standard operation procedure	3
7	Workplace problem	2
8	Improper schedule for 5S	2
9	Lack or training	1
10	Lack of cooperation	1

(iii) Propose **THREE (3)** solutions for improvement based on main causes as stated in **Q1(b)(ii)** using Tree Diagram.

(6 marks)

Q2 Measurement data for P chart collected is shown in **Table Q2**.

Table Q2: P chart data

SAMPLE	SAMPLE QUANTITY	DEFECTS	PROPOSITION
1	149	50	0.34
2	190	66	0.35
3	115	67	0.58
4	145	60	0.41
5	100	57	0.57
6	98	59	0.60
7	76	35	0.46
8	125	69	0.55
9	100	54	0.54
10	125	62	0.50
11	111	70	0.63
12	116	58	0.50
13	92	30	0.33
14	98	68	0.69
15	162	54	0.33
16	87	62	0.71
17	105	70	0.67
18	110	58	0.53
19	98	30	0.31
20	96	68	0.71
21	100	54	0.54
22	100	62	0.62
23	97	70	0.72
24	122	58	0.48
25	125	30	0.24
26	110	68	0.62
27	100	54	0.54
Sum			

Calculate:

(a) $\overline{P}$ (2 marks)

(b) $\overline{n}$ (2 marks)

(c) Upper Control Limit (UCL) for P chart. (3 marks)

(d) Lower Control Limit (LCL) for P chart. (3 marks)

(e) Draw P chart based on **Table Q2**

(10 marks)

(f) Analyse whether the process is stable or not based on P chart result in **Q2(e)**.

(5 marks)

Q3 Measurement data for X chart collected is shown in **Table Q3**.

Table Q3: X chart data

SUBGROUP NUMBER	DATE	TIME	MEASUREMENTS X1	X2	X3	X4	AVERAGE X	RANGE R
1	10-Feb	8:00	35	42	33	38	37.00	9.0
2		9:00	48	37	39	42	41.50	11.0
3		10:00	36	40	35	37	37.00	5.0
4		11:00	41	40	43	42	41.50	3.0
5		12:00	39	33	44	40	39.00	11.0
6	11-Feb	8:00	42	41	43	34	40.00	9.0
7		9:00	44	41	41	46	43.00	5.0
8		10:00	33	41	38	36	37.00	8.0
9		11:00	48	44	47	45	46.00	4.0
10		12:00	47	43	36	42	42.00	11.0
11	12-Feb	8:00	38	41	39	38	39.00	3.0
12		9:00	37	37	41	37	38.00	4.0
13		10:00	40	38	47	35	40.00	12.0
14		11:00	38	39	45	42	41.00	7.0
15		12:00	50	42	43	45	45.00	8.0
16	13-Feb	8:00	33	35	29	39	34.00	10.0
17		9:00	41	40	29	34	36.00	12.0
18		10:00	38	44	28	58	42.00	30.0
19		11:00	35	41	37	38	37.75	6.0
20		12:00	56	55	45	48	51.00	11.0
21	14-Feb	8:00	38	40	45	37	40.00	8.0
22		9:00	39	42	35	40	39.00	7.0
23		10:00	42	39	39	36	39.00	6.0
24		11:00	43	36	35	38	38.00	8.0
25		12:00	39	38	43	44	41.00	6.0
Sum								

Calculate:

(a) $\bar{\bar{X}}$ (3 marks)

(b) $\bar{R}$ (3 marks)

(c) Upper Control Limit (UCL_x) for X bar chart. (3 marks)

(d) Lower Control Limit (LCL_x) for X bar chart. (3 marks)

(e) Upper Control Limit (UCL_R) for R chart. (3 marks)

(f) Draw X bar chart based on **Table Q3**. (10 marks)

Q4 (a) Explain **THREE (3)** phases of life history curve.

(6 marks)

(b) GTB company has received many reliability claims from customers after using their product.

Propose **THREE (3)** main solutions based on important aspects in reliability.

(6 marks)

(c) A system has 4 components, A, B, C and D, with reliability values of 0.993, 0.957, 0.940 and 0.986, respectively.

Calculate the system reliability if the components are in parallel.

(3 marks)

(d) Calculate the reliability of the system in **Figure Q4**.

(4 marks)

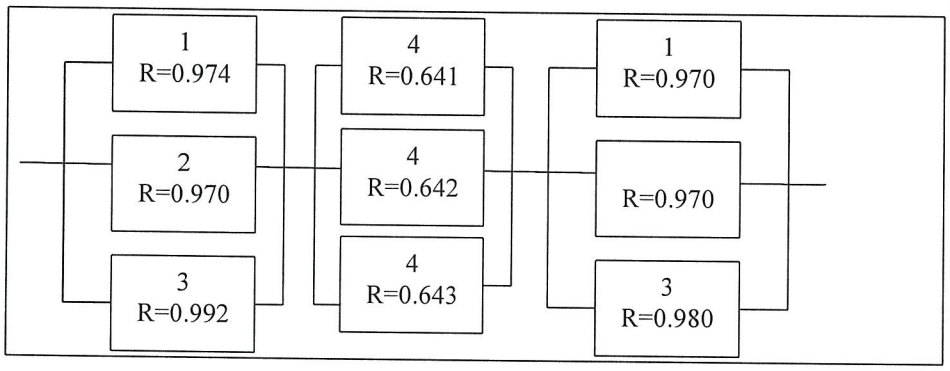

Figure Q4: Reliability System

(e) Life test result shows that six of the units failed after 20, 30, 40, 45, 46 and 60 hours, respectively. Life test has been conducted to 20 units of LCD TV. Fourteen units were still operating at the end of 200 hours.

(i) Calculate the failure rate at the end of 200 hours.

(3 marks)

(ii) Calculate the mean life based on failure rate from **Q4(f)(i)**. Assume that there is a constant failure rate for the test.

(3 marks)

-END OF QUESTIONS-